UNIT-1

Fundamentals of Electrical Engineering and DC machines

- **Voltage:** The force required to move the particles from one place to another place. It is also known as an emf (Electro motive force).

(or)

- The potential difference between two points is known as voltage. It is denoted by ‘V’ (or) ‘v’.

(or)

- Voltage is defined as the ratio of energy to the charge.

$$V=W/Q= \text{Joules}/ \text{Coulombs}= \text{Volts}$$

- **Current:** There are free electrons available in all semi conductive and conductive materials. These free electrons move at random in all directions within the structure in the absence of external voltage.
- The movement of electrons from one end of the material to the other constitute an electrical current, denoted by either 'I' or 'i'.

(or)

- It is defined as the rate of change of unit charge.

$$I=Q/t= \text{Coulombs/seconds}= \text{Amperes}$$

- **Energy:** It is the capacity for doing work.
- It is existing in many forms such as mechanical, chemical and electrical etc.
- **Power:** The rate of change of energy is known as power, denoted by 'P' or 'p'.

$$P=W/t=\text{Joules/seconds}=\text{Watts}$$

- We can also write

$$P=dW/dt=dW/dq * dq/dt=V*I$$

$$P=V*I$$

Network elements: The basic electrical elements such as resistor, inductor and capacitor are known as electrical elements.

Electrical Network: The interconnection of electrical elements such as R, L and C are connected in a desired manner to perform a specific function.

Ohms Law

- **Statement :**

  At constant temperature, the current flowing across an element is directly proportional to the potential difference across it

$$V \propto I \Rightarrow \quad V=I*R$$

Limitations ???

1. Validation fails with unilateral Elements

2. Can not be applied to Non linear Elements

KIRCHOFF'S LAW

Kirchoff's Voltage Law (KVL)

The sum of all the Voltage Drops around the loop is equal to Zero

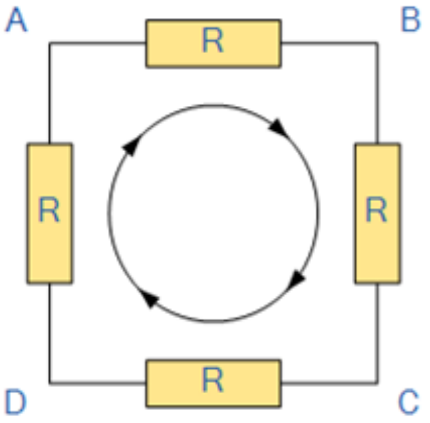

$$V_{AB} + V_{BC} + V_{CD} + V_{DA} = 0$$

Kirchoff's Current Law (KCL)

Currents Entering the Node Equals Currents Leaving the Node

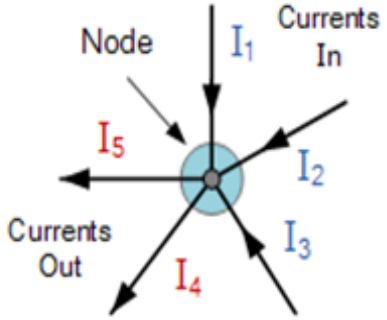

$$I_1 + I_2 + I_3 + (-I_4 + -I_5) = 0$$

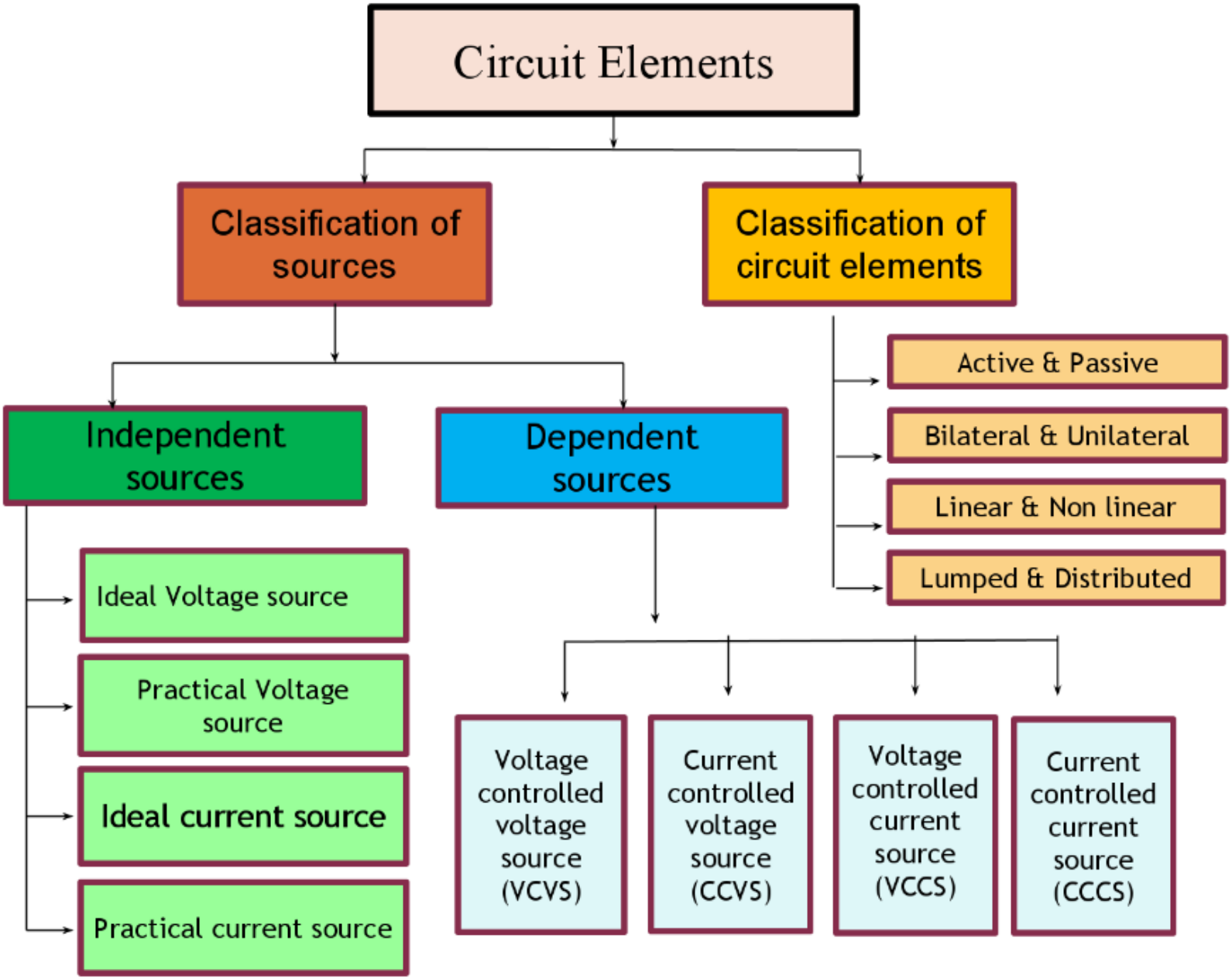
Circuit Elements
Classification of sources
Classification of circuit elements
Independent sources
Dependent sources
Active & Passive
Bilateral & Unilateral
Linear & Non linear
Lumped & Distributed
Ideal Voltage source
Practical Voltage source
Ideal current source
Practical current source
Voltage controlled voltage source (VCVS)
Current controlled voltage source (CCVS)
Voltage controlled current source (VCCS)
Current controlled current source (CCCS)

Types of sources

- **Network sources:** sources are circuit elements that can supply energy Ex: voltage source and current source. which are again divided broadly into two types:

1. **Independent voltage source:** It is an element capable of generating voltage across its terminals which is independent of magnitude and direction of current flowing through it.
2. **Independent current source:** It is an element that can supply any amount of energy at a specified current which is independent of voltage across its terminals.

Voltage source characteristics

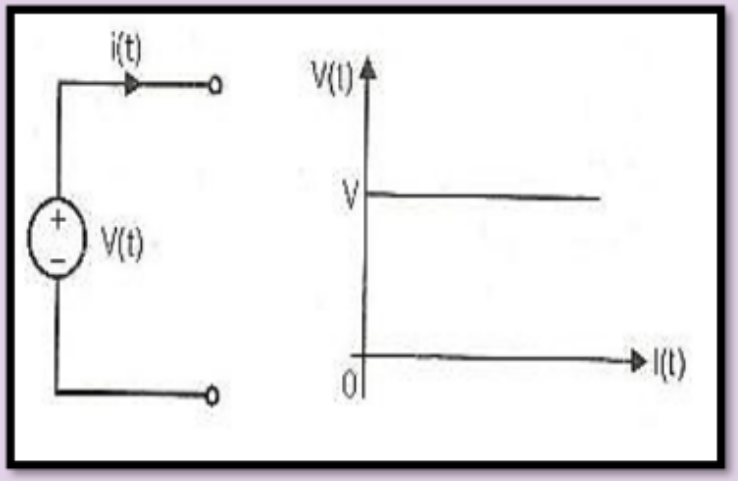

Ideal Voltage source

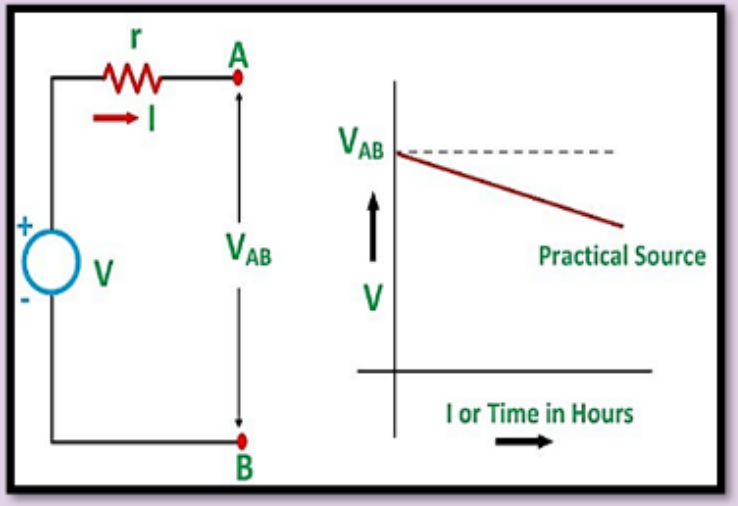

Practical Voltage source

Current source characteristics

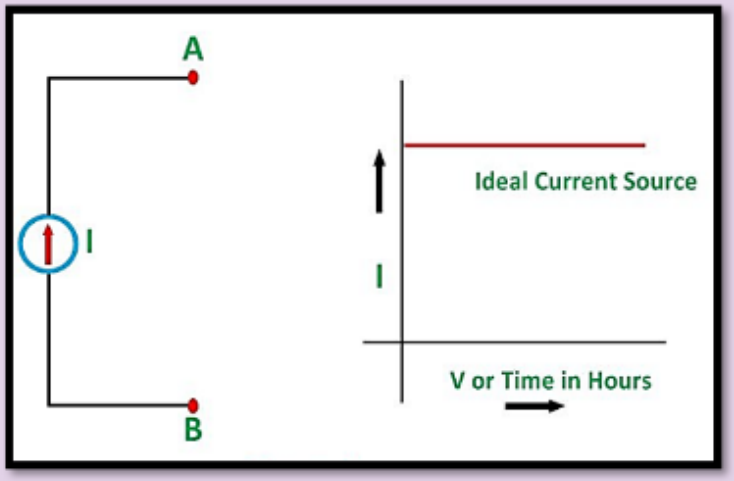

Ideal current source

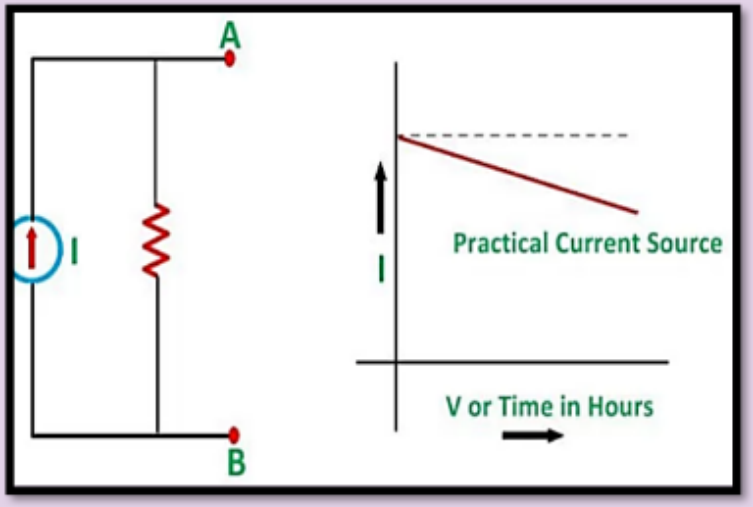

Practical current source

Series, Parallel and Series-Parallel Circuits:

- A set of resistors are said to be in series if the same value of current is flowing in them. (Current is same and voltage is different)
- A set of resistors are said to be in parallel if they are having the same potential i.e., they are connected between same nodes. (Current is different and voltage is same)

- Resistances in series: $R_{eq} = R_1 + R_2 + \text{-----} + R_n$
- Resistances in parallel: $1/R_{eq} = 1/R_1 + 1/R_2 + \text{-----} + 1/R_n$
- Inductances in series: $L_{eq} = L_1 + L_2 + \text{-----} + L_n$
- Inductances in parallel: $1/L_{eq} = 1/L_1 + 1/L_2 + \text{-----} + 1/L_n$
- Capacitances in series: $1/C_{eq} = 1/C_1 + 1/C_2 + \text{-----} + 1/C_n$
- Capacitances in parallel: $C_{eq} = C_1 + C_2 + \text{-----} + C_n$

1. Find an equivalent resistance for the networks shown below.

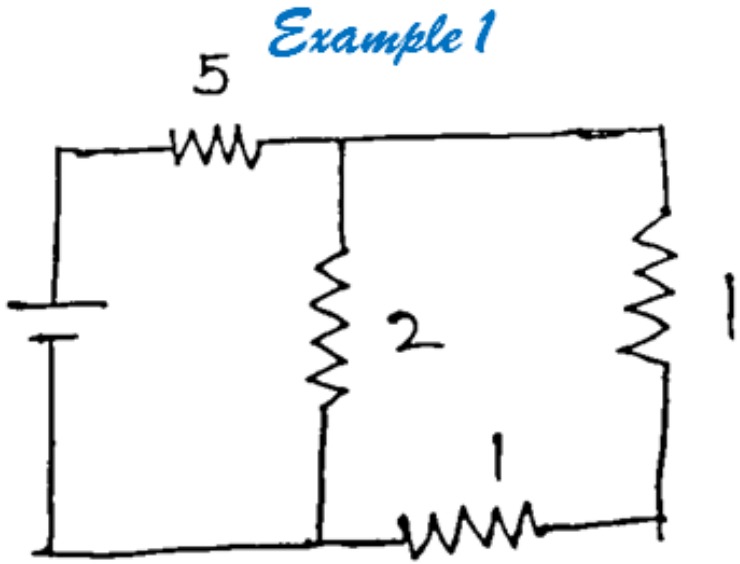

R = 6Ω

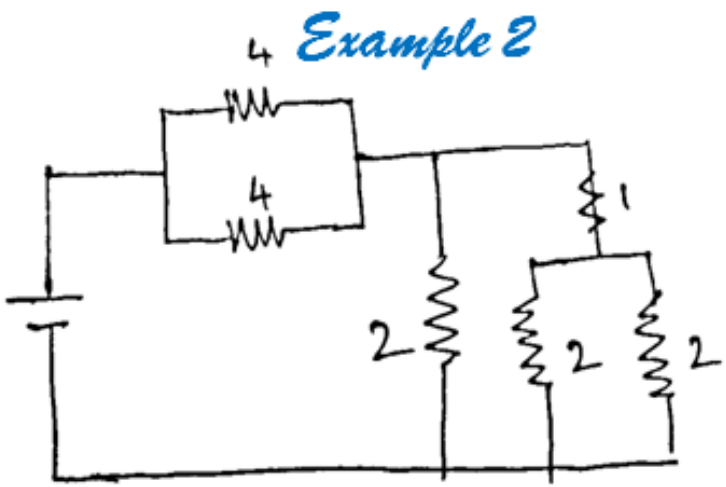

R=3Ω

2. Find an equivalent resistance between A and B in the network of Fig.

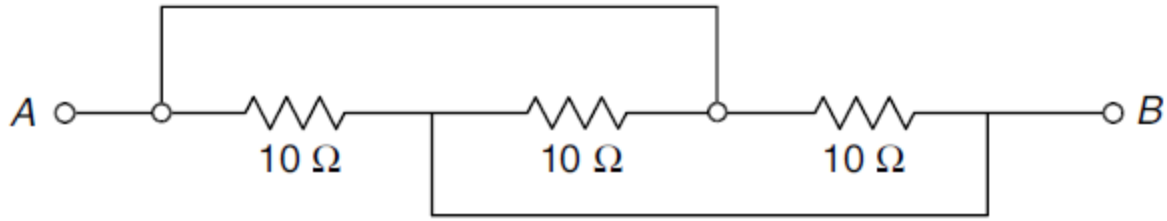

Solution: Marking all the junctions and redrawing the network (Fig.),

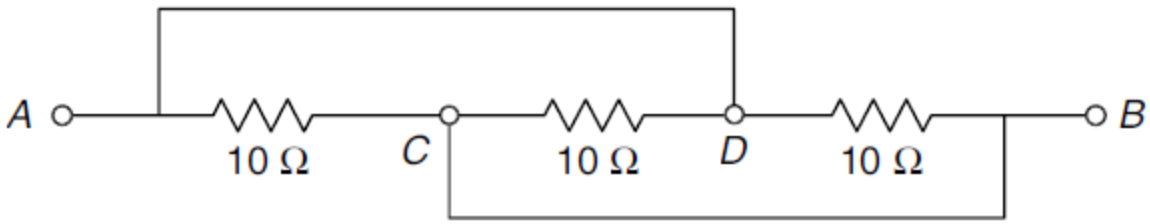

(a)

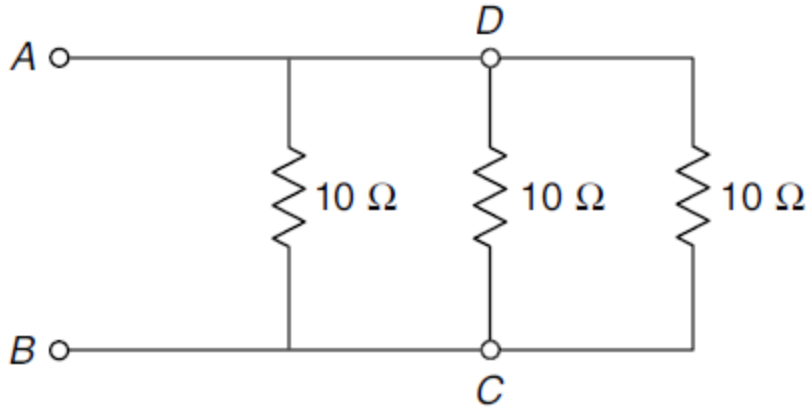

(b)

$$R_{AB} = 10 \parallel 10 \parallel 10 = 3.33\ \Omega$$

1. Find an equivalent inductance between terminals A and B in the network of Fig.

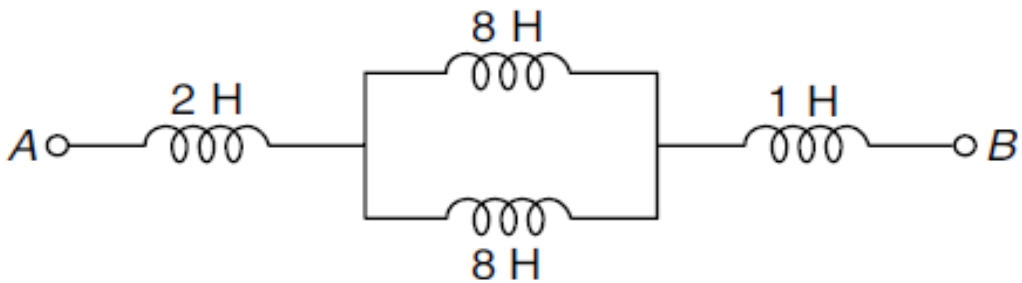

Solution: The network can be simplified by series–parallel reduction technique (Fig.).

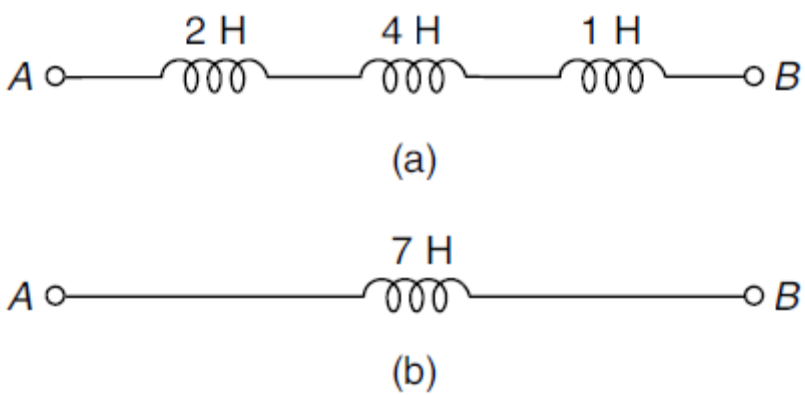

$$L_{AB} = 7 \text{ H}$$

1. What is the equivalent capacitance between terminals A and B in the network of Fig.

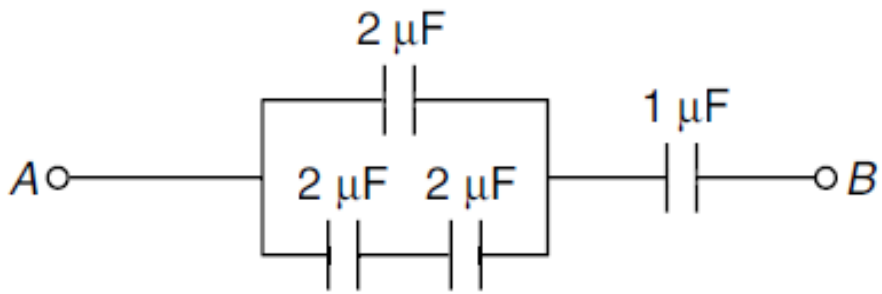

Solution: The network can be simplified by series–parallel reduction technique (Fig).

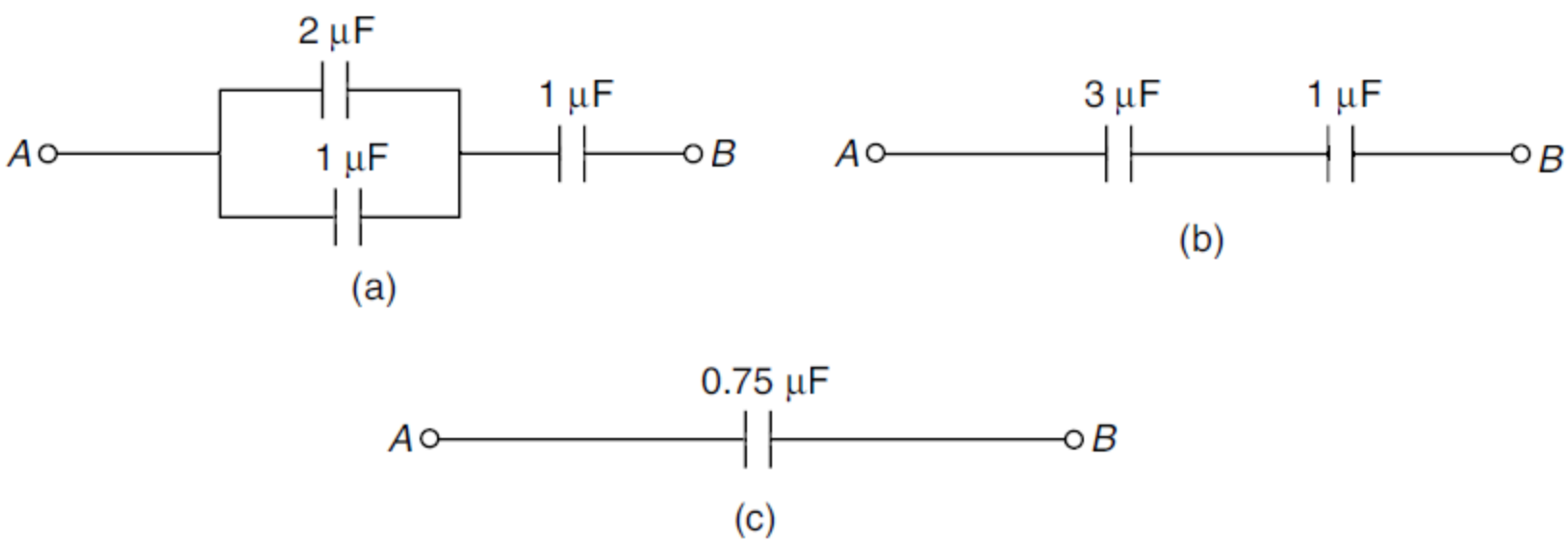

$$C_{AB} = 0.75\ \mu F$$

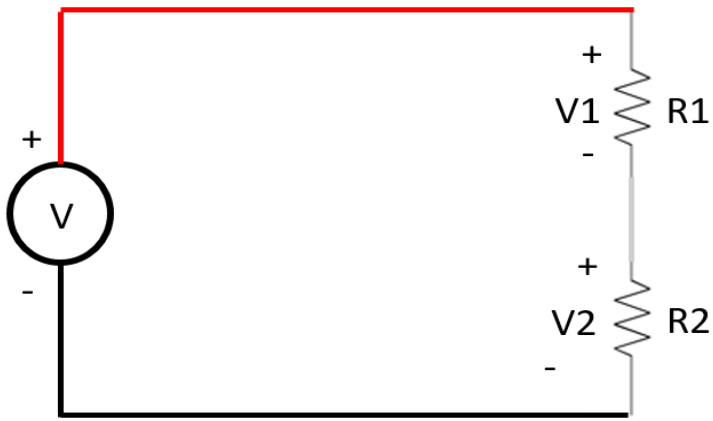

V1 is the voltage across R1:

$$V1 = \frac{R1}{R1+R2} * V$$

V2 is the voltage across R2:

$$V2 = \frac{R2}{R1+R2} * V$$

Voltage division rule

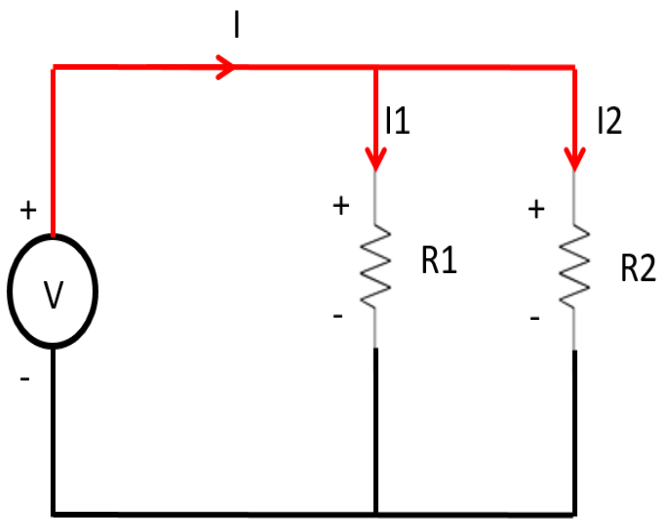

I1 is the current following through R1:

$$I1 = \frac{R2}{R1+R2} * I$$

I2 is the current following through R2:

$$I2 = \frac{R1}{R1+R2} * I$$

Current division rule

Mesh Analysis Method

- A mesh is defined as a loop which does not contain any other loops within it. Mesh analysis is applicable only
- for planar networks. A network is said to be planar if it can be drawn on a plane surface without crossovers.

PROCEDURE

Step 1: Convert the current sources (if any) in to voltage sources using source transformation.

Step 2: Identify the meshes in the circuit and assign current directions in each mesh.

Step3 : Mark the polarities across the voltage sources take voltage source as +ve if current passes from -ve polarity to +ve polarity otherwise -ve.

Step 4: For convince take voltage drops across resistors as -ve.

Step 5: Write KVL equation for each mesh to evaluate the unknown loop currents and branch voltages

1. Calculate loop currents i_1 and i_2 for circuit shown in below using mesh current analysis technique.

Step 1: Assign mesh currents i_1, i_2

Step 2: Apply KVL to each of the meshes.

1: $15 - 5i_1 - 10(i_1 - i_2) - 10 = 0$

2: $10 - 10(i_2 - i_1) - 10i_2 = 0$

Step 3: Solve the equations to get the mesh currents

1: $-15i_1 + 10i_2 = -5$

2: $10i_1 - 20i_2 = -10$

$i_1 = 1$ A

$i_2 = 1$ A

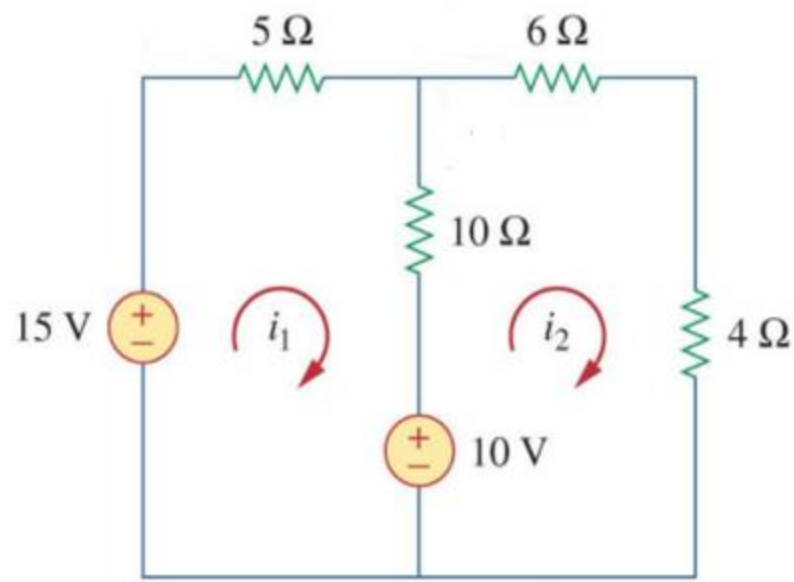

2. Determine the current through the 5 Ω resistor of the network shown in Fig. using mesh analysis method.

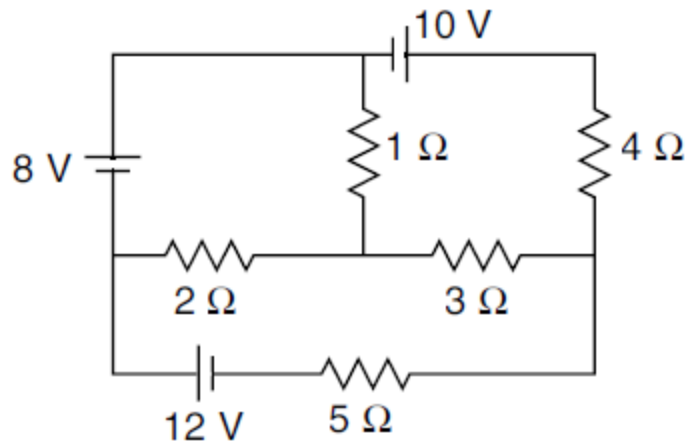

Solution: Assigning clockwise currents in three meshes as shown in Fig.

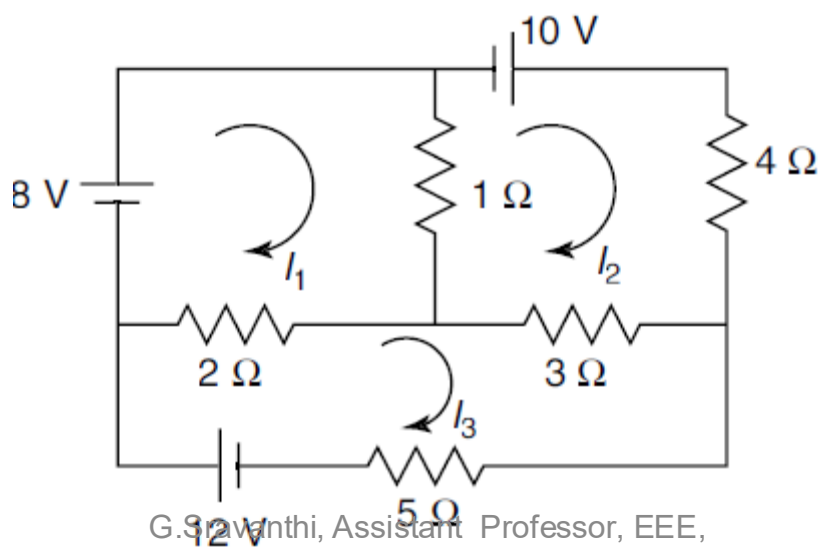

Applying KVL to Mesh 1,

$$8 - 1(I_1 - I_2) - 2(I_1 - I_3) = 0$$

$$3I_1 - I_2 - 2I_3 = 8 \qquad \ldots(\text{i})$$

Applying KVL to Mesh 2,

$$10 - 4I_2 - 3(I_2 - I_3) - 1(I_2 - I_1) = 0$$

$$-I_1 + 8I_2 - 3I_3 = 10 \qquad \ldots(\text{ii})$$

Applying KVL to Mesh 3,

$$-2(I_3 - I_1) - 3(I_3 - I_2) - 5I_3 + 12 = 0$$

$$-2I_1 - 3I_2 + 10I_3 = 12 \qquad \ldots(\text{iii})$$

Solving Eqs (i), (ii), and (iii),

$$I_1 = 6.01 \text{ A}$$

$$I_2 = 3.27 \text{ A}$$

$$I_3 = 3.38 \text{ A}$$

$$I_{5\Omega} = I_3 = 3.38 \text{ A}$$

- 3. Calculate mesh currents for the given circuit using mesh analysis method.

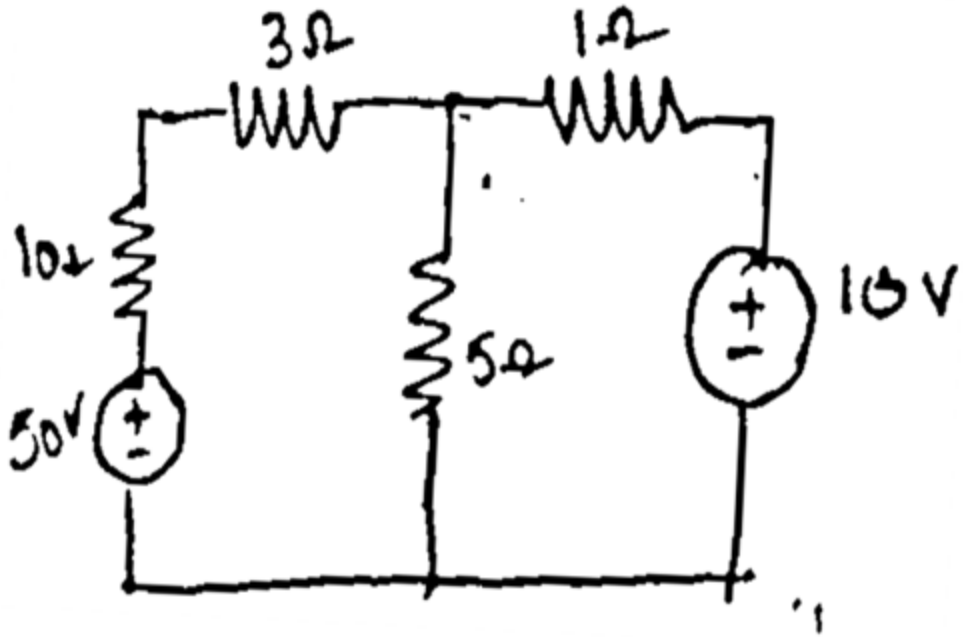

Ans i1 = 3.012 A (clock wise)
i2 = 0.843A (clockwise)

Nodal Analysis

1. Assuming that a network has ‘n’ nodes , assign reference node and reference directions.
2. Assign a current , voltage names for each branch and node respectively.
3. Apply KCL at each node except ground node.
4. Solve equations for unknown node voltages.
5. Using these voltages find any required branch current.

1. Calculate the current through 2 Ω resistor for the network shown in Fig.

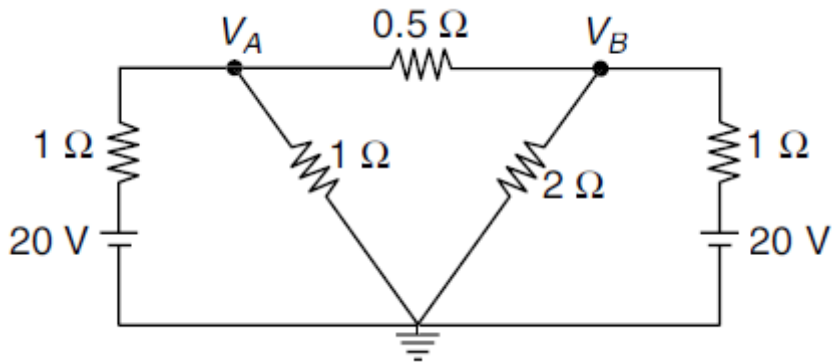

Solution: Assume that the currents are moving away from the nodes.

Applying KCL at Node A,

$$\frac{20-V_A}{1}+\frac{V_A}{1}+\frac{V_A-V_B}{0.5}=0$$

$$\left(\frac{1}{1}+\frac{1}{1}+\frac{1}{0.5}\right)V_A-\frac{1}{0.5}V_B=\frac{20}{1}$$

$$4V_A-2V_B=20 \qquad \ldots(i)$$

Applying KCL at Node B,

$$\frac{V_A-V_B}{0.5}+\frac{V_B}{2}+\frac{20-V_B}{1}=0$$

$$-\frac{1}{0.5}V_A\left(\frac{1}{0.5}+\frac{1}{2}+\frac{1}{1}\right)V_B=\frac{20}{1}$$

$$-2V_A+3.5V_B=20 \qquad \ldots(ii)$$

Cont..

Solving Eqs (i) and (ii),

$$V_A = 11 \text{ V}$$

$$V_B = 12 \text{ V}$$

Current through the 2 Ω resistor $= \dfrac{V_B}{2} = \dfrac{12}{2} = 6 \text{ A}$

2. Find the voltage across the 5 Ω resistor for the network shown in Fig. using nodal analysis method.

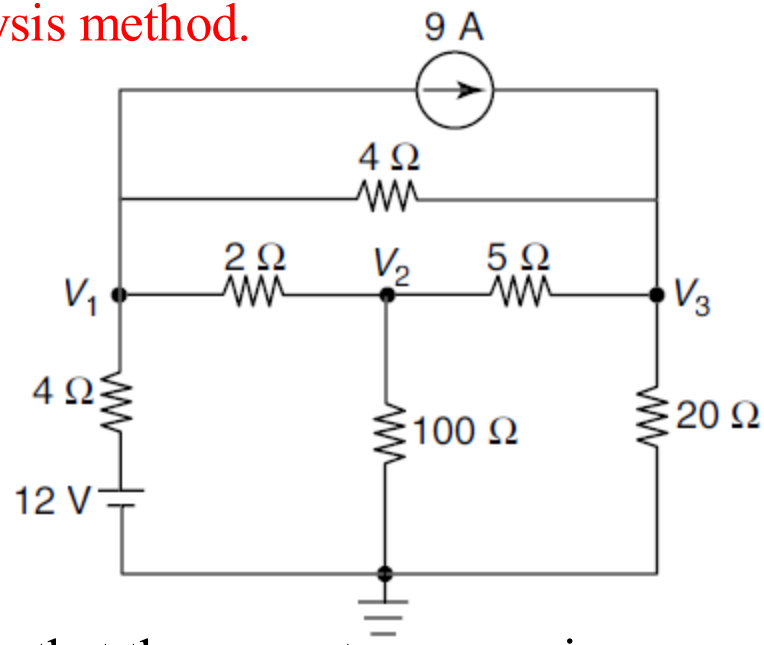

Solution: Assume that the currents are moving away from the nodes.

Applying KCL at Node 1,

$$\frac{12-V_1}{4}+\frac{V_1-V_2}{2}+\frac{V_1-V_3}{4}+9=0$$

$$\left(\frac{1}{4}+\frac{1}{2}+\frac{1}{4}\right)V_1-\frac{1}{2}V_2-\frac{1}{4}V_3=-9+\frac{12}{4}$$

$$V_1-0.5\,V_2-0.25\,V_3=-6 \qquad \ldots(i)$$

Cont…

Applying KCL at Node 2,

$$\frac{V_1 - V_2}{2} + \frac{V_2}{100} + \frac{V_2 - V_3}{5} = 0$$

$$-\frac{1}{2}V_1 + \left(\frac{1}{2} + \frac{1}{100} + \frac{1}{5}\right)V_2 - \frac{1}{5}V_3 = 0$$

$$-0.5\,V_1 + 0.71\,V_2 - 0.2\,V_3 = 0 \qquad \ldots(ii)$$

Applying KCL at Node 3,

$$\frac{V_2 - V_3}{5} + \frac{V_3}{20} + \frac{V_1 - V_3}{4} = 9$$

$$-\frac{1}{4}V_1 - \frac{1}{5}V_2 + \left(\frac{1}{5} + \frac{1}{20} + \frac{1}{4}\right)V_3 = 9$$

$$-0.25\,V_1 - 0.2\,V_2 + 0.5\,V_3 = 9 \qquad \ldots(iii)$$

Solving Eqs (i), (ii) and (iii),

$$V_1 = 6.35 \text{ V}$$
$$V_2 = 11.76 \text{ V}$$
$$V_3 = 25.88 \text{ V}$$

Voltages across the 5 Ω resistor $= V_3 - V_2 = 25.88 - 11.76 = 14.12$ V

3. Find the voltage at nodes 1 and 2 for the network shown in Fig. using nodal analysis method.

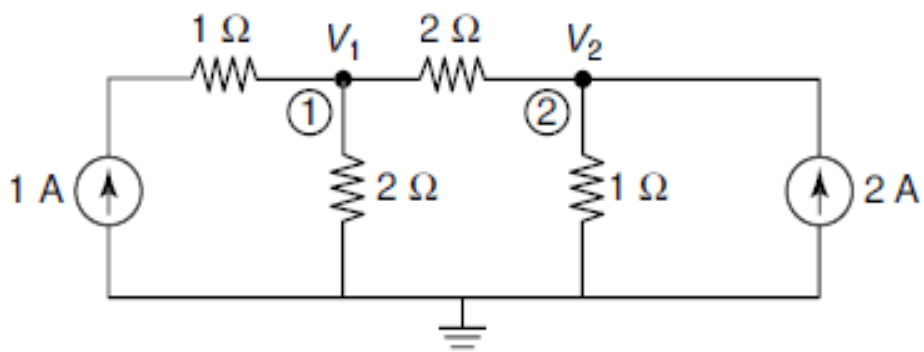

Ans:

$$V_1 = 2\ \text{V}$$

$$V_2 = 2\ \text{V}$$

Superposition Theorem

- The superposition theorem extends the use of Ohm's Law to circuits with multiple sources.
- ***Statement:-*** ***"The current through, or voltage across, an element in a linear bilateral network equal to the algebraic sum of the currents or voltages produced independently by each source."***
- Superposition theorem is very helpful in determining the voltage across an element or current through a branch when the circuit contains multiple number of voltage or current sources.

- **Procedure:**
- Consider only one source to be active at a time.
- Replace all other ideal voltage sources by short circuit & all other ideal current sources by open circuit. (If it is practical voltage/ current source, then it is replaced with their internal resistances respectively.)

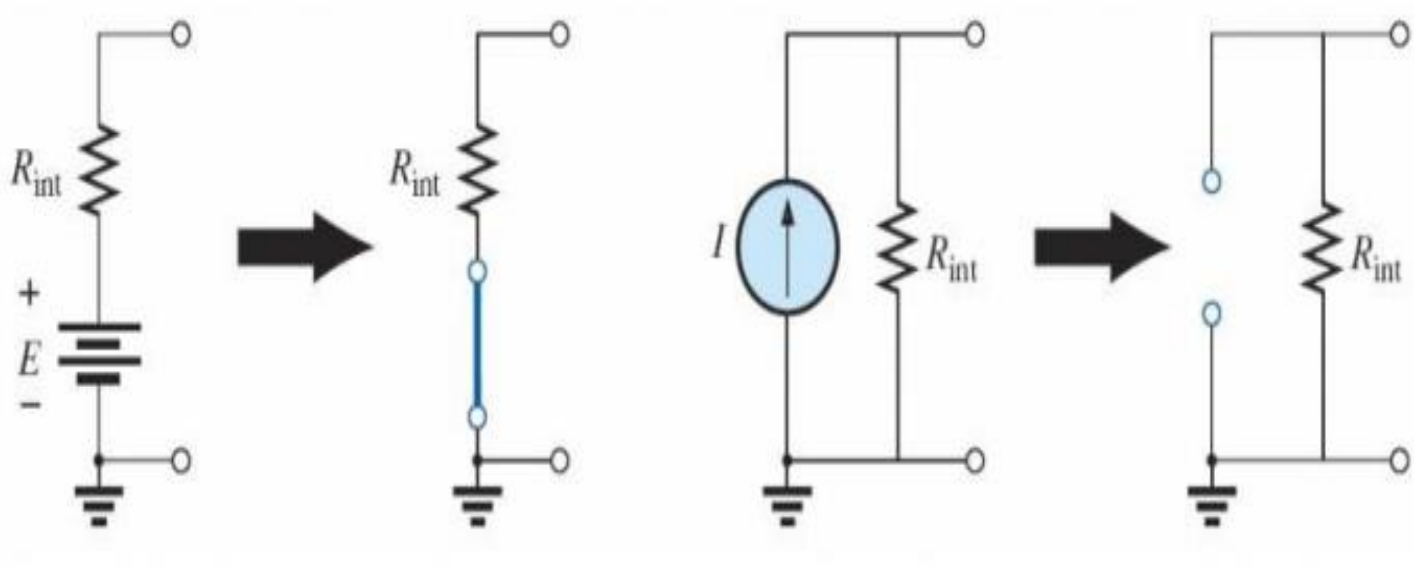

FIG. *Removing a voltage source and a current source to permit the application of the superposition theorem.*

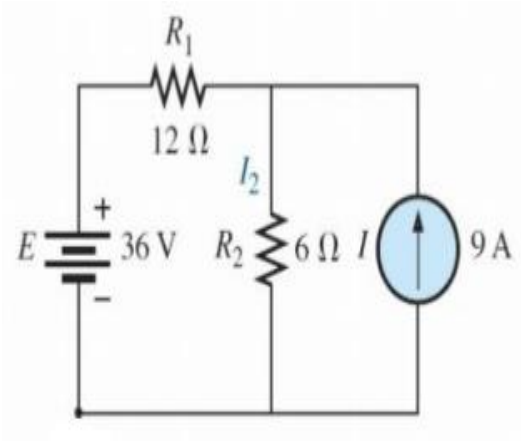

- **Example.1 : Calculate current I_2 in the given figure using superposition theorem?**

Case 1: With 36V voltage source

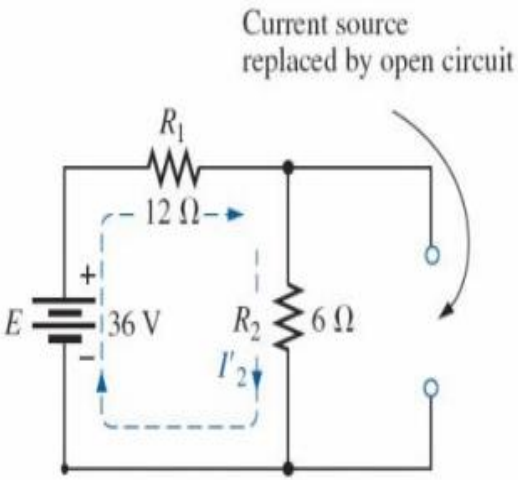

I_2'=36/(12+6)= 36/18=2A

Case 2: With 9A current source

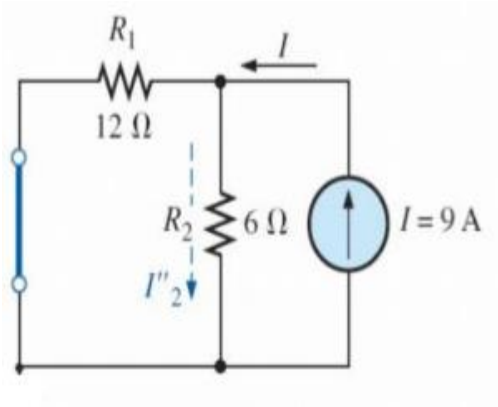

I_2''=9*(12/(12+6))=6A

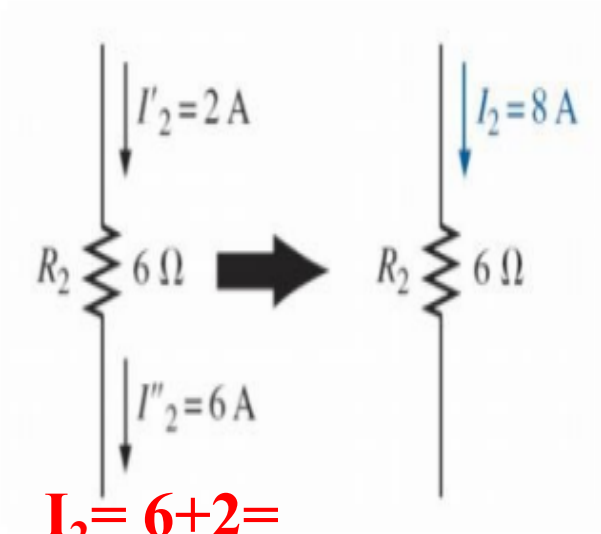

I_2= 6+2= 8A

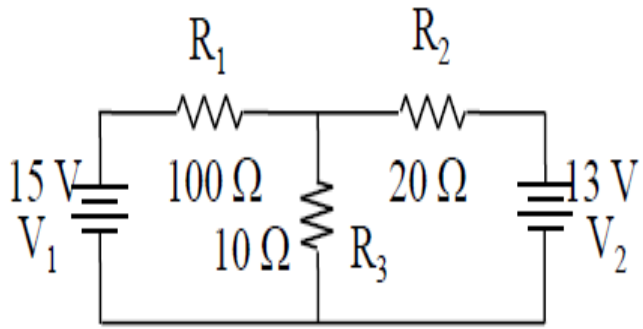

Example.2: Calculate current through R_3 (10Ω) in the given figure using superposition theorem?

Case 1: With 15V voltage source

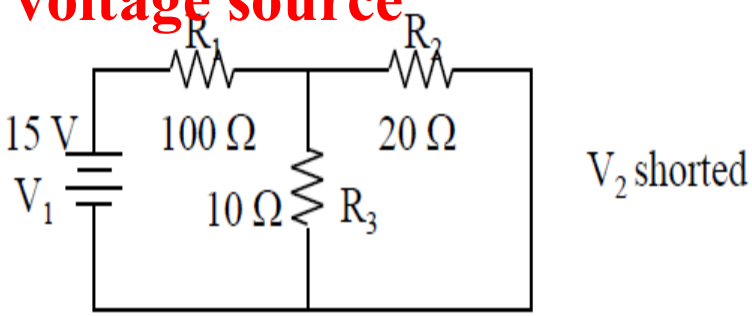

- R_{eq}=((20*10)/(20+10)+100)
  =106.7Ω
- I_T=0.141A
- I_{R3}'=0.141*(20/20+10)
  =0.094A

Case 2: With 13V voltage source

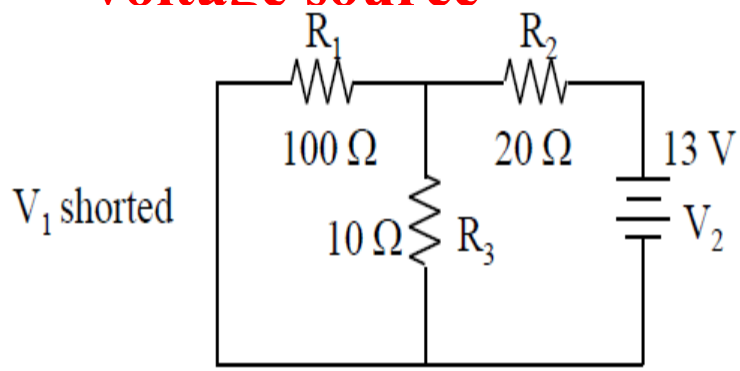

- R_{eq}=((100*10)/(100+10)+20)
  =29.09Ω
- I_T=0.447A
- I_{R3}''=0.447*(100/100+10)
  =0.406A

Cont…

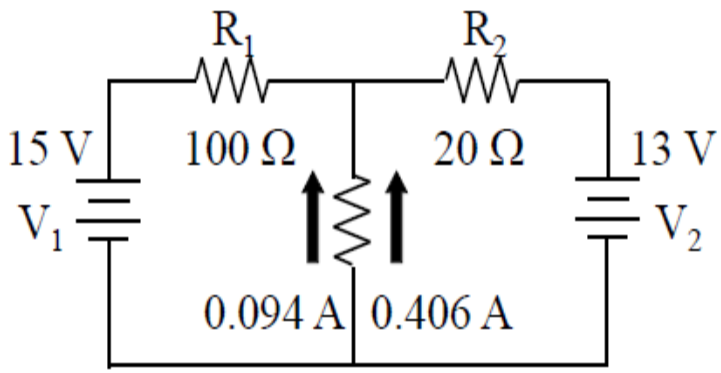

I_{R3}=0.094+0.406=
0.5A

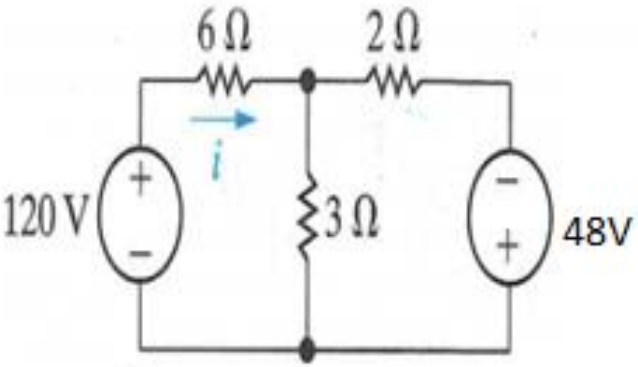

Example.3 : Calculate current 'i' shown in the fig using superposition theorem.

Ans: i=17A

Thevenin's Theorem

- It states that 'any two terminals of a network can be replaced by an equivalent voltage source and an equivalent series resistance. The voltage source is the voltage across the two terminals with load, if any, removed. The series resistance is the resistance of the network measured between two terminals with load removed and all voltage and current sources have been replaced with the short circuit and open circuit respectively

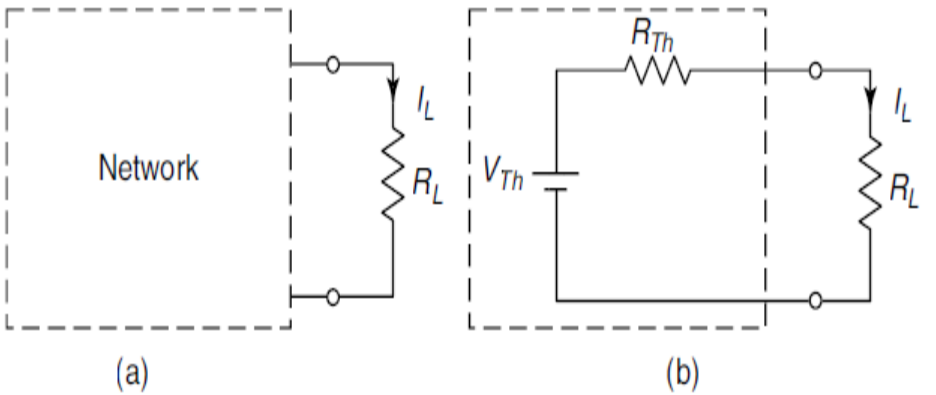

Steps to be Followed in Thevenin's Theorem

1. Remove the load resistance R_L.
2. Find the open circuit voltage V_{Th} across points A and B.
3. Find the resistance R_{Th} as seen from points A and B.
4. Replace the network by a voltage source V_{Th} in series with resistance R_{Th}.
5. Find the current through R_L using Ohm's law.

$$I_L = \frac{V_{Th}}{R_{Th} + R_L}$$

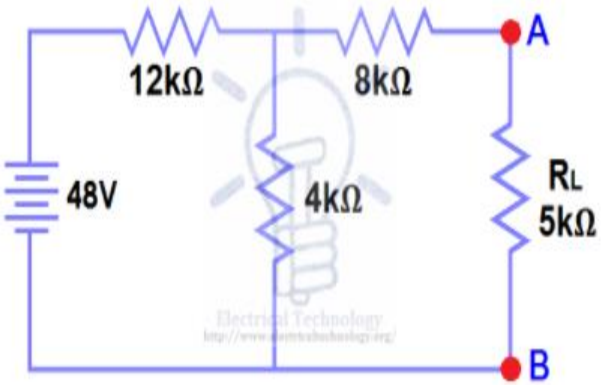

Example. 1: Calculate Load voltage and load current for the given circuit using thevenins theorem.

Step:1 V_{TH} Calculation

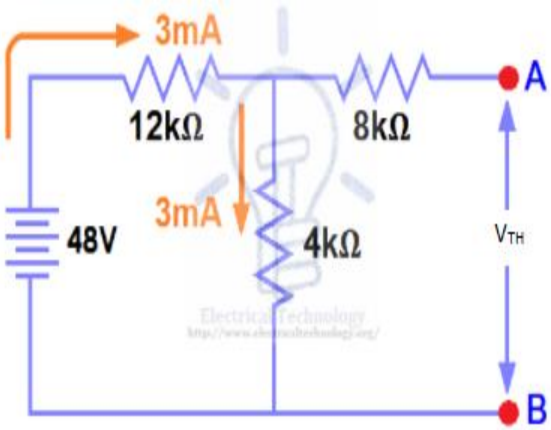

$i=48/(16*1000) = 3mA$

$V_{TH}=V_{OC}=$Voltage across 4KΩ

$= 3mA*4K\Omega= 12V$

Step:2 R_{TH} Calculation

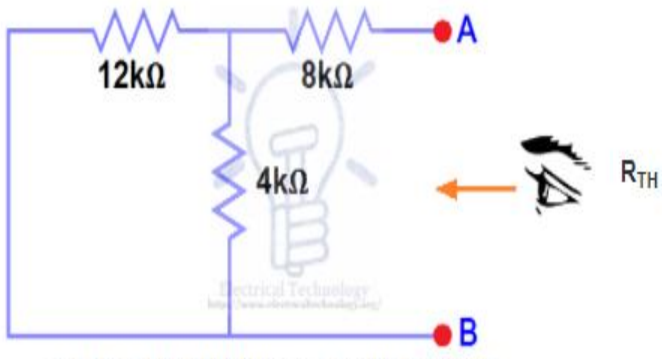

$= 8k\Omega + (4k\,\Omega \parallel 12k\Omega) \rightarrow = 8k\Omega + 3k\Omega$

$R_{TH} = 11k\Omega$

Step 3: Equivalent Circuit

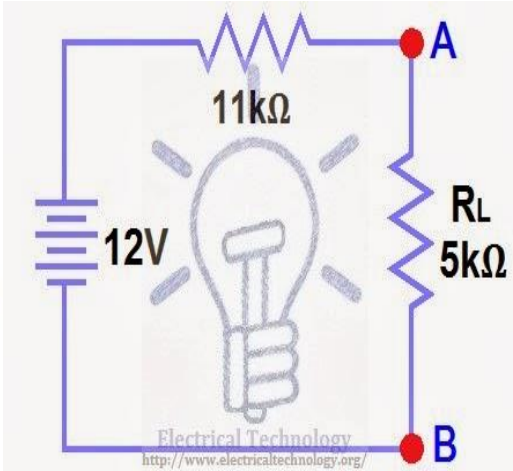

$$I_L = \frac{V_{TH}}{R_{TH} + R_L} = \frac{12V}{11k\Omega + 5k\Omega}$$

$I_L = 0.75mA$

$V_L = I_L \times R_L$

$V_L = 0.75mA \times 5k\Omega$

$V_L = 3.75V$

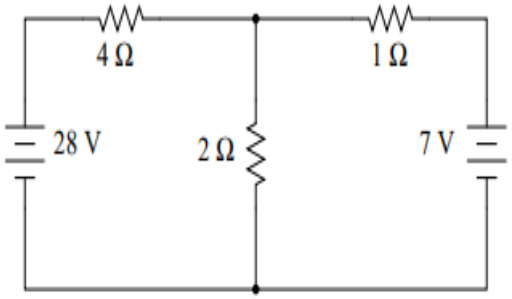

Example. 2: Calculate current flowing through 2Ω resistance by thevenins theorem.

Step:1 V_{TH} Calculation

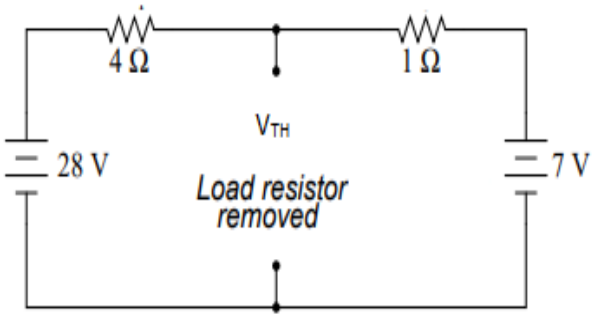

i=(28-7)/(4+1)= 4.2A

V_{TH}=7+(4.2*1)=11.2V

(or)

V_{TH}=28-(4.2*4)=11.2V

Step:2 R_{TH} Calculation

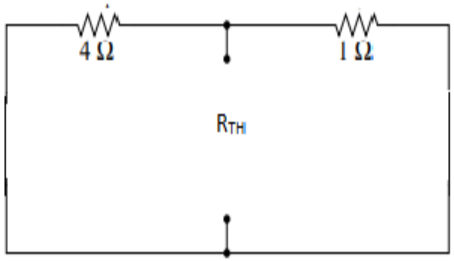

R_{TH}=(4*1)/(4+1)=0.8Ω

Step 3: Equivalent Circuit

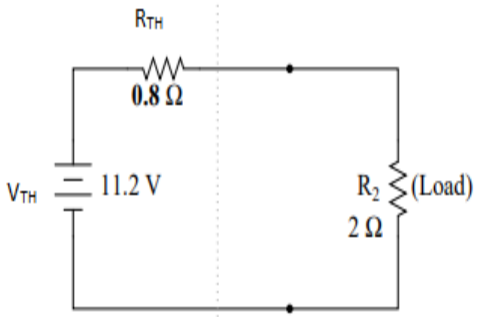

I_L=11.2/(0.8+2)=4 A

Example.3

Determine the current through the 24 Ω resistor in Fig.

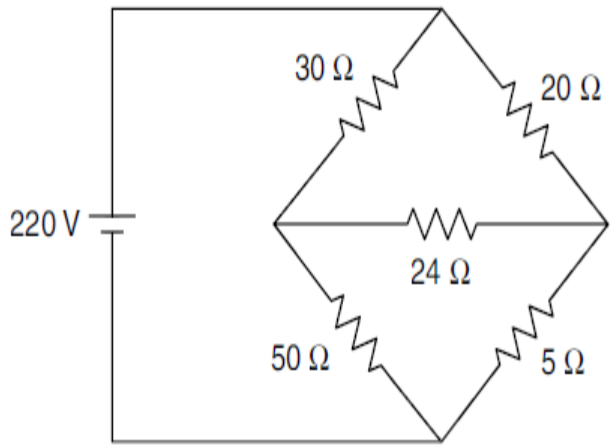

Solution

Step I Calculation of V_{Th} (Fig.)

$$I_1 = \frac{220}{30+50} = 2.75 \text{ A}$$

$$I_2 = \frac{220}{20+5} = 8.8 \text{ A}$$

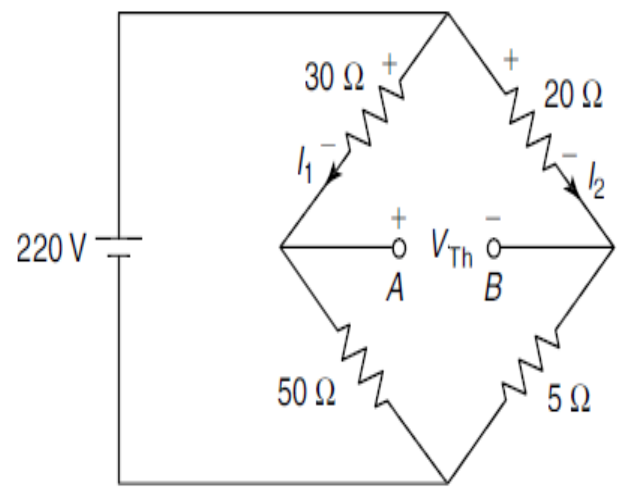

Writing the V_{Th} equation,

$$V_{Th} + 30I_1 - 20I_2 = 0$$

$$V_{Th} = 20I_2 - 30I_1 = 20(8.8) - 30(2.75) = 93.5 \text{ V}$$

Cont…

Step II Calculation of R_{Th} (Fig.)

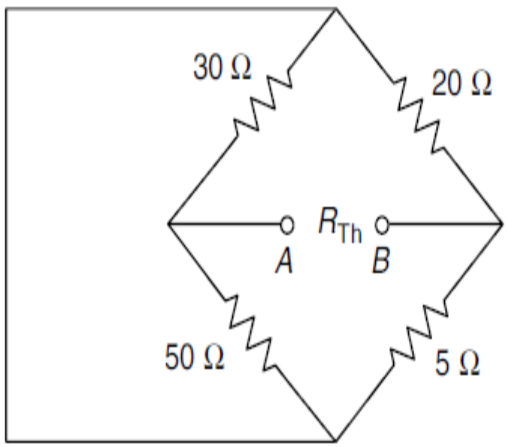

Redrawing the circuit (Fig.),

$$R_{Th} = (30 \parallel 50) + (20 \parallel 5) = 22.75\ \Omega$$

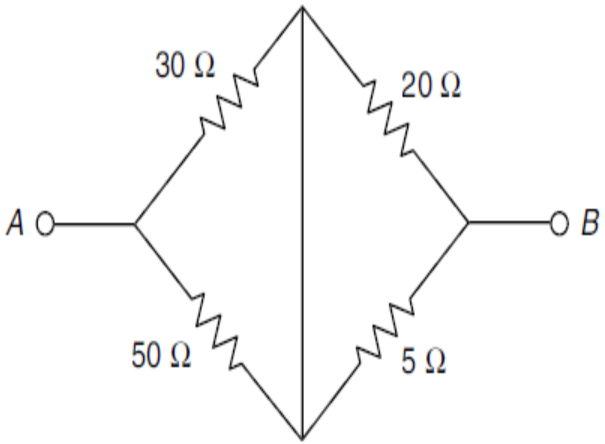

Step III Calculation of I_L (Fig.)

$$I_L = \frac{93.5}{22.75 + 24} = 2\ \text{A}$$

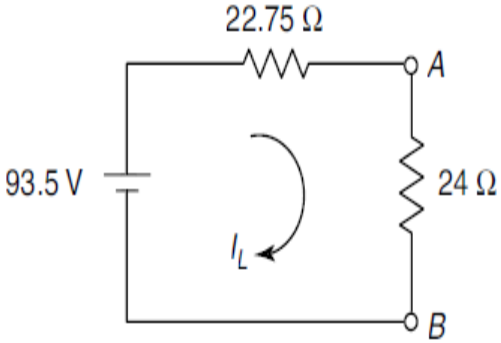

Norton's Theorem

- It states that 'any two terminals of a network can be replaced by an equivalent current source and an equivalent parallel resistance.' The constant current is equal to the current which would flow in a short circuit placed across the terminals. The parallel resistance is the resistance of the network when viewed from these open-circuited terminals after all voltage and current sources have been replaced with the short circuit and open circuit respectively.

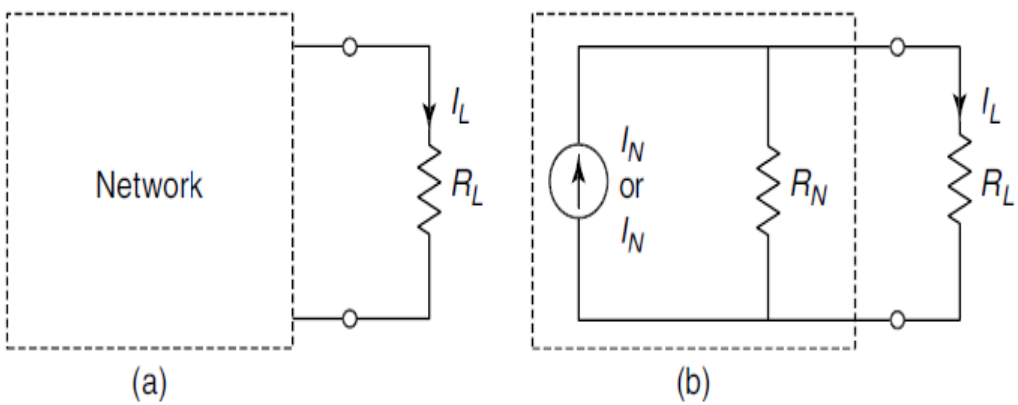

$$I_L = I_N \frac{R_N}{R_N + R_L}$$

Fig. *Network illustrating Norton's theorem*

Steps to be followed in Norton's Theorem:

1. Remove the load resistance R_L and put a short circuit across the terminals.

2. Find the short-circuit current I_{SC} or I_N.

3. Find the resistance R_N as seen from points A and B.

4. Replace the network by a current source I_N in parallel with resistance R_N.

5. Find current through R_L by current–division rule.

$$I_L = I_N \frac{R_N}{R_N + R_L}$$

Find the current through the 10 Ω resistor in Fig.

Example. 1:

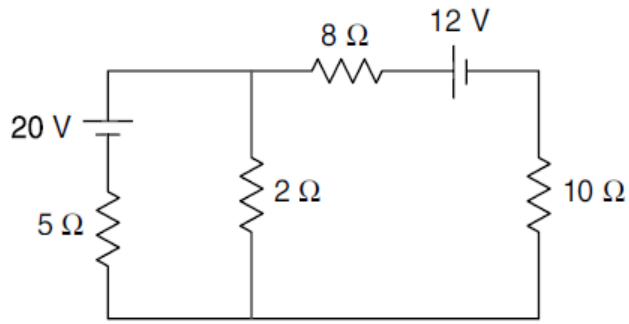

Solution

Step I Calculation of I_N (Fig.)

Applying KVL to Mesh 1,

$$-5I_1 + 20 - 2(I_1 - I_2) = 0$$

$$7I_1 - 2I_2 = 20 \qquad \text{...(i)}$$

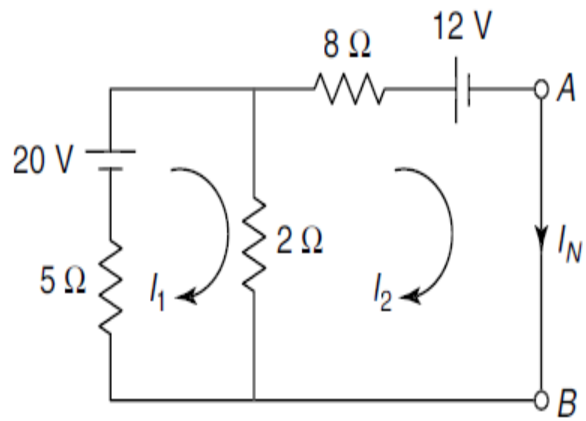

Applying KVL to Mesh 2,

$$-2(I_2 - I_1) - 8I_2 - 12 = 0$$

$$-2I_1 + 10I_2 = -12 \qquad \text{...(ii)}$$

Solving Eqs (i) and (ii),

$$I_2 = -0.67\,\text{A}$$

$$I_N = I_2 = -0.67\,\text{A}$$

Cont….

Step II Calculation of R_N (Fig.)

$$R_N = (5 \| 2) + 8 = 9.43\ \Omega$$

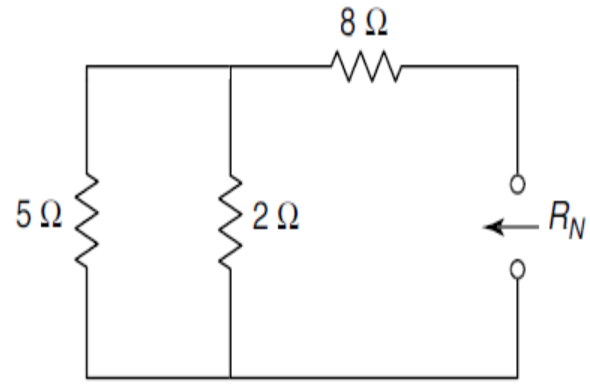

Step III Calculation of I_L (Fig.)

$$I_L = 0.67 \times \frac{9.43}{9.43 + 10} = 0.33\ \text{A}(\uparrow)$$

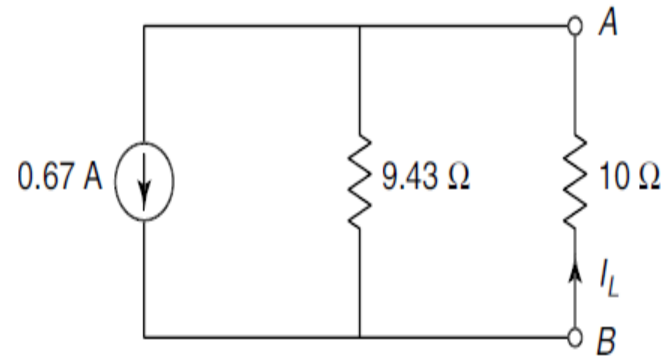

Find the current in the 10 Ω resistor in Fig.

Example. 2:

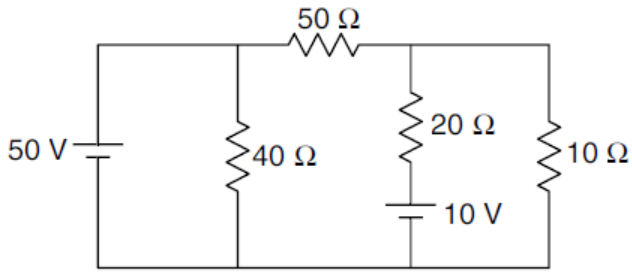

Solution

Step I Calculation of I_N (Fig.)

The resistance of 40 Ω becomes redundant as it is connected across the 50 V source (Fig.).

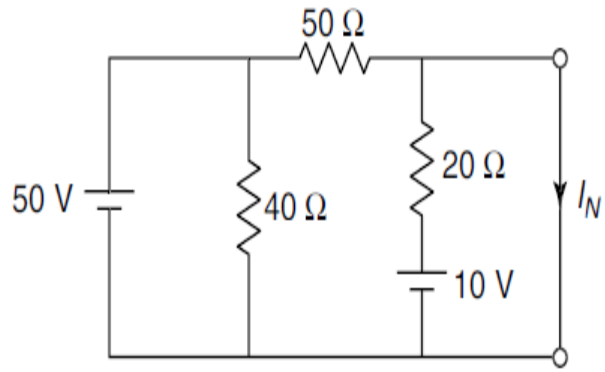

Applying KVL to Mesh 1,

$$50 - 50I_1 - 20(I_1 - I_2) - 10 = 0$$

$$70I_1 - 20I_2 = 40 \quad \text{...(i)}$$

Applying KVL to Mesh 2,

$$10 - 20(I_2 - I_1) = 0$$

$$-20I_1 + 20I_2 = 0 \quad \text{...(ii)}$$

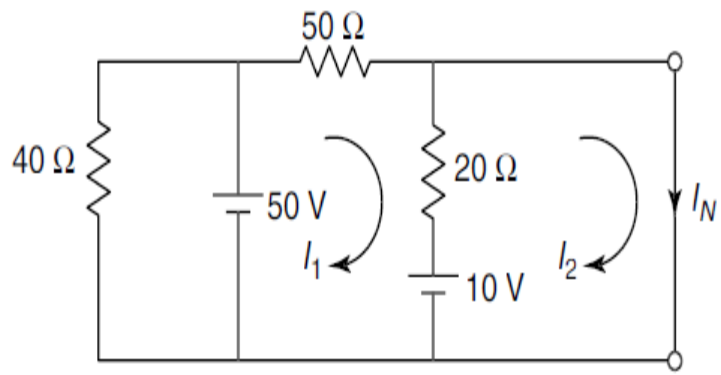

Solving Eqs (i) and (ii),

$$I_1 = 1\text{A}$$

$$I_2 = 1.5\text{A}$$

$$I_N = I_2 = 1.5\text{A}$$

Cont…

Step II Calculation of R_N (Fig.)

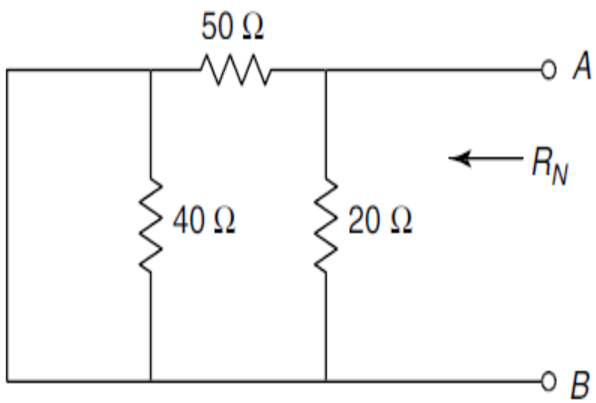

$$R_N = 50 \parallel 20 = 14.28\,\Omega$$

Step III Calculation of I_L (Fig.)

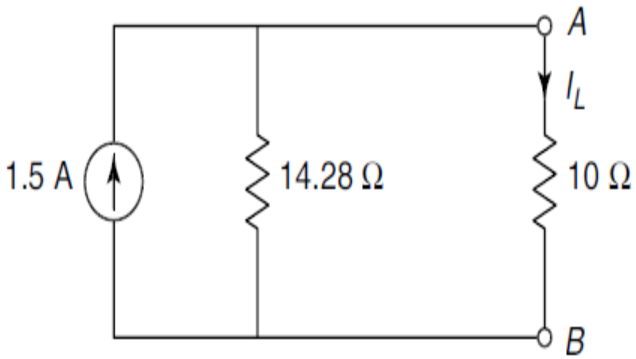

$$I_L = 1.5 \times \frac{14.28}{14.28 + 10} = 0.88\,\text{A}$$

Example. 3:

Find the current through the 10 Ω resistor in Fig.

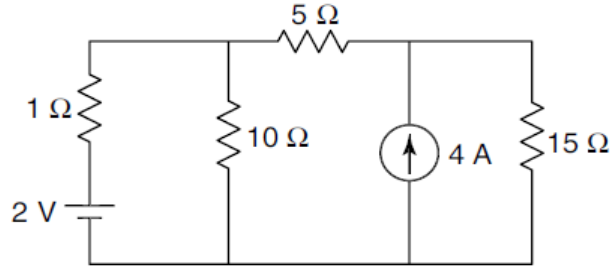

Solution

Step I Calculation of I_N (Fig.)

Applying KVL to Mesh 1,

$$2 - 1I_1 = 0$$

$$I_1 = 2 \qquad \text{...(i)}$$

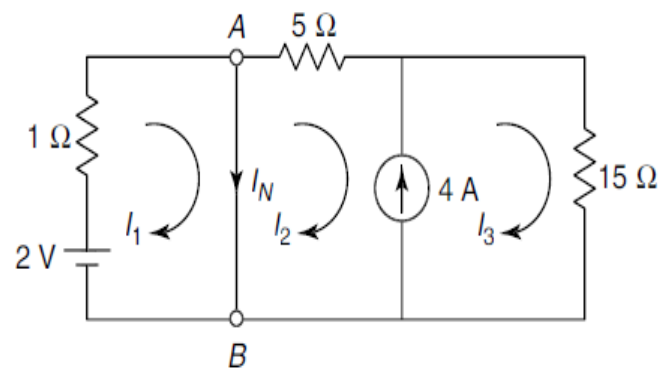

Meshes 2 and 3 will form a supermesh.

Writing the current equation for the supermesh,

$$I_3 - I_2 = 4 \qquad \text{...(ii)}$$

Applying KVL to the supermesh,

$$-5I_2 - 15I_3 = 0 \qquad \text{...(iii)}$$

Solving Eqs (i), (ii) and (iii),

$$I_1 = 2\,\text{A}$$

$$I_2 = -3\,\text{A}$$

$$I_3 = 1\,\text{A}$$

$$I_N = I_1 - I_2 = 2 - (-3) = 5\,\text{A}$$

Cont….

Step II Calculation of R_N (Fig.)

$$R_N = 1 \| (5+15) = 0.95\ \Omega$$

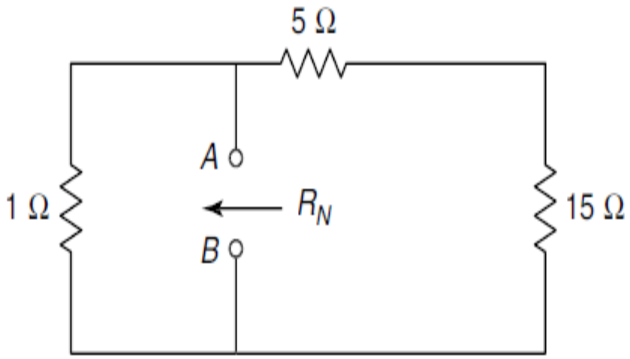

Step III Calculation of I_L (Fig.)
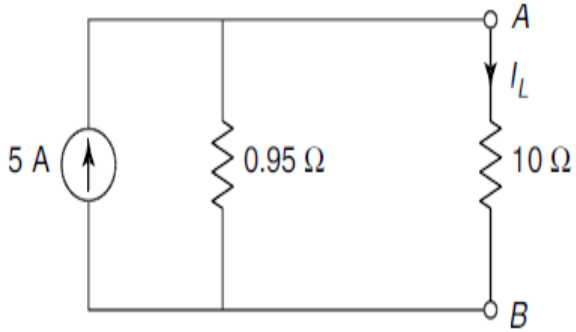
$$I_L = 5 \times \frac{0.95}{0.95+10} = 0.43\text{A}$$